ESP32-32U is powered by 5V 1A wall adapter

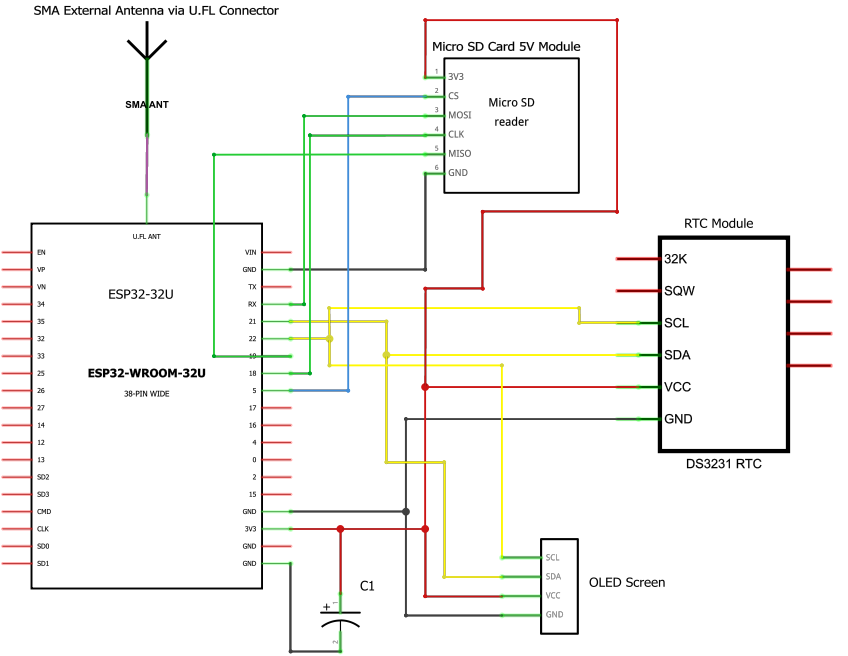

fritzing